No part of this document may be re-produced or transmitted in any form or stored in any retrieval system of any nature without the written permission from Douglas Carroll Consulting Engineers as copyright holder except as agreed for use on the project for which the document was originally issued. © Douglas Carroll Consulting Engineers Copyright.

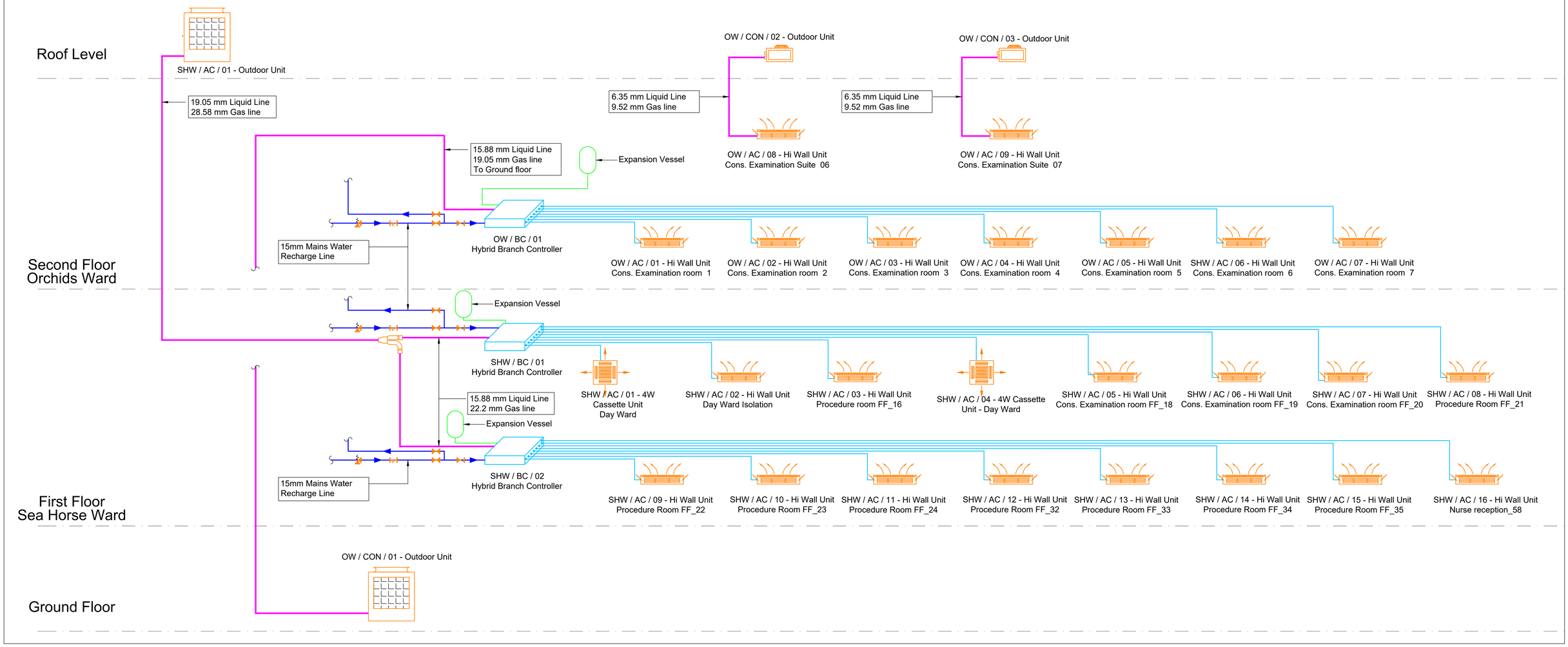

GENERAL NOTES

1. ALL HVRF EQUIPMENT AND PIPEWORK SHALL BE INSTALLED IN ACCORDANCE WITH THE MANUFACTURER'S REQUIREMENTS AND PROJECT SPECIFICATION.
2. REFRIGERANT PIPEWORK SHALL BE HARD DRAWN COPPER, SIZED IN ACCORDANCE WITH THE MANUFACTURER'S REQUIREMENTS.
3. REFRIGERANT PIPE INSULATION SHALL BE PROVIDED WITH ALUMINIUM CLADDING/FOIL FINISH.
4. REFRIGERANT PIPEWORK SHALL BE ROUTED ON CABLE TRAYS. PROVIDE COVERED CABLE TRAYS WHERE PIPEWORK IS EXPOSED.
5. ALL REFRIGERANT PIPE JOINTS SHALL BE BRAZED WITH NITROGEN PURGING DURING BRAZING.
6. PROVIDE VALVE ARRANGEMENT AS SHOWN ON THE TYPICAL DETAIL.
7. PROVIDE AUTOMATIC AIR VENTS AT ALL HIGH POINTS OF WATER PIPEWORK.
8. ALL WATER-SIDE PIPEWORK SHALL BE FLUSHED, CLEANED, PRESSURE TESTED AND COMMISSIONED PRIOR TO HANDOVER.
9. ALL PIPEWORK SHALL BE ADEQUATELY SUPPORTED IN ACCORDANCE WITH THE MANUFACTURER'S REQUIREMENTS AND RELEVANT STANDARDS.
10. PROVIDE DRAIN PUMPS FOR ALL HI-WALL INDOOR UNITS. CASSETTE UNITS SHALL BE PROVIDED WITH INTEGRAL DRAIN PUMPS.
11. ALL CONDENSATE DRAIN PIPEWORK SHALL BE PROVIDED WITH DRY TRAPS.
12. CONDENSATE DRAIN PIPEWORK SHALL BE uPVC AND INSULATED WITH 9MM THICK TUBULAR INSULATION.
13. OUTDOOR UNITS SHALL BE INSTALLED ON SUITABLE STRUCTURAL SUPPORTS/BASES WITH ADEQUATE SERVICE AND AIRFLOW CLEARANCES.
14. FIRESTOP ALL PIPEWORK AND CABLE PENETRATIONS THROUGH FIRE-RATED WALLS AND FLOORS USING APPROVED FIRESTOPPING SYSTEMS.
15. PROVIDE PERMANENT LABELS FOR ALL REFRIGERANT AND WATER PIPE ROUTES, INCLUDING FLOW/RETURN IDENTIFICATION WHERE APPLICABLE.
16. ALL PIPEWORK ROUTES SHOWN ARE DIAGRAMMATIC. FINAL ROUTES SHALL BE COORDINATED WITH ALL OTHER BUILDING SERVICES PRIOR TO INSTALLATION.
17. PROVIDE ADEQUATE ACCESS FOR INSPECTION AND MAINTENANCE OF ALL EQUIPMENT, VALVES AND CONTROLS.
18. ALL SYSTEMS SHALL BE TESTED, COMMISSIONED AND HANDED OVER COMPLETE WITH TEST/COMMISSIONING RECORDS.

Hybrid VRF BMS Schematic

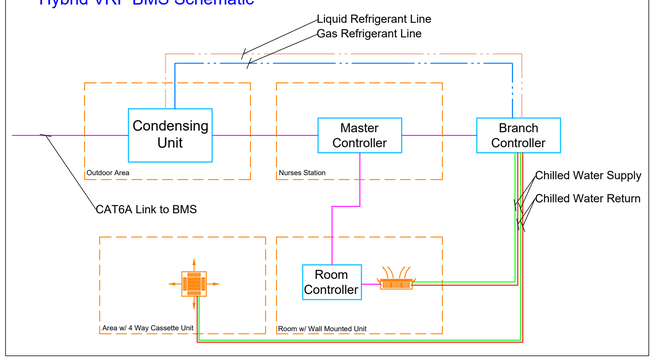

LEGEND

- REFRIGERENT PIPE
- CHILLED WATER PIPES
- REFNET JOINT
- ISOLATION VALVE
- STRAINER
- AUTOMATIC AIR VALVE
- NON RETURN VALVE
- MAINS WATER CONNECTION
- PRESSURE RELIEF VALVE

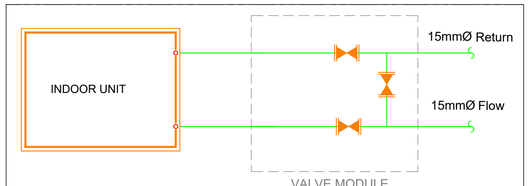

Typical Detail for Indoor Unit Connection

Revision	Date	No.	Checked
-	-	-	-

Douglas Carroll
CONSULTING ENGINEERS
Office 7, 3rd Floor, Station House, Railway Square, Waterford, IE. X91 XK8Y
Tel: 051-306670 Web:www.dceng.ie E-mail: info@dceng.ie
Douglas Carroll Consulting Engineers Ltd trading as Douglas Carroll Consulting Engineers

Project: Air Conditioning Installation, Seahorse and Orchid Wards at CUH	Client: Health Services Executive South
Drawing Discipline: Mechanical Services Installation	
Drawing Title: Mechanical System Schematic	

Scale	Drawing Size	Drawing by	Checked by	Date
Refer to Scalebar (NTS)	A1	RK	DA	05-10-2026

Document Number: Project - Zone-System-Level - Type - Originator - Role - Number	Suitability	Revision	DC REF	Stage
26048-XX-57-XX-SC-DCCE-ME-00001	-	-	W26-048	Tender